2311

2321

2311/2321 Series

Steel Single/Double Sprocket Roller

Product Features

- Welding the steel sprocket to the steel tube gives it the capacity to transmit high torque and meet the requirements for heavy duty transportation.
- The precision ball bearing is pressed tightly into the steel bearing housing for maximum durability.
- The environmental working conditions are broad. They can be used in both high and low temperature applications.
- The covering on the outside of the sprocket protects the bearings by providing excellent resistance to dust and splashed water.
- Temperature range: −5℃ ~ +40℃,Remove the end cap (green) and retaining ring (black), the temperature can reach −30℃ ~ +80℃.

Paraments

Bearing Unit	
Bearing house	Steel, zinc plated
Precision ball bearing	6001/6202/6204
Ground sleeve	Polyamide ,black

Driving element	
Sprocket	Steel

2311/2321 Series Load Capacity

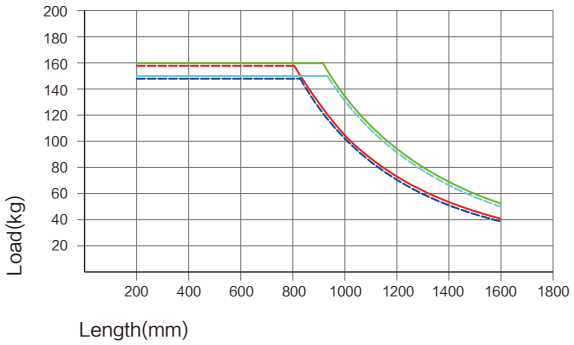

- Steel tube Φ50x2.0, shaft Φ15, internal thread
- Steel tube Φ50x1.5, shaft Φ15, internal thread
- Steel tube Φ50x2.0, shaft Φ12, internal thread
- Steel tube Φ50x1.5, shaft Φ12, internal thread

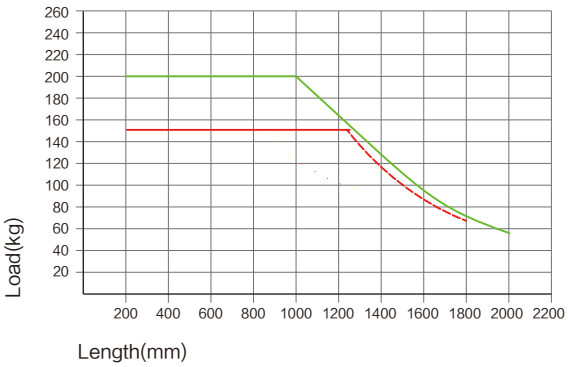

- Steel tube Φ60x2.0, shaft Φ15, internal thread
- Steel tube Φ60x2.0, shaft Φ12, internal thread

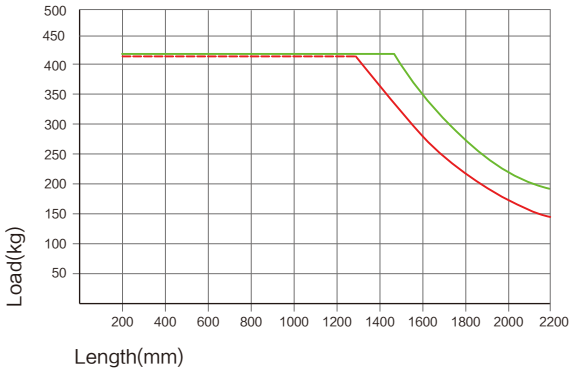

- Steel tube Φ76x4.0, shaft Φ20, internal thread
- Steel tube Φ76x3.0, shaft Φ20, internal thread

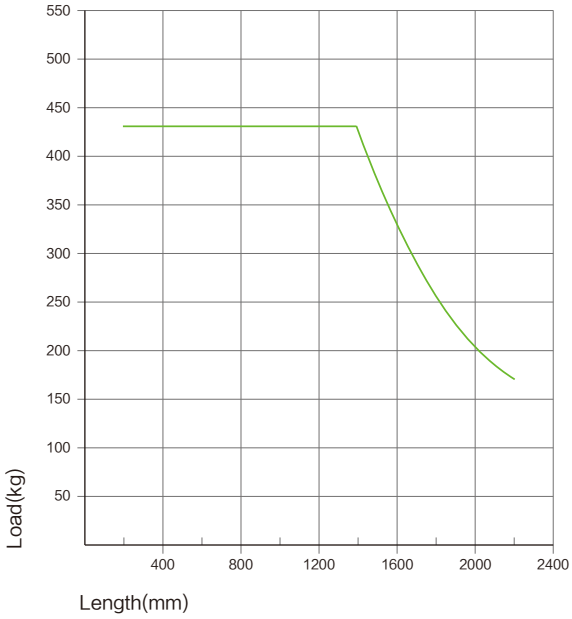

- Steel tube Φ80x3.0, shaft Φ20, internal thread

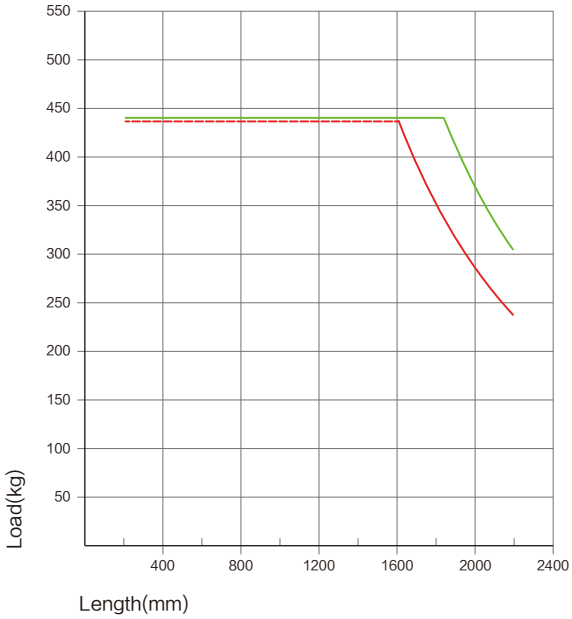

- Steel tube Φ89x4.0, shaft Φ20, internal thread
- Steel tube Φ89x3.0, shaft Φ20, internal thread

⚠ Above data shows the static load capacity of the roller for a uniformly distributed load.
You should also consider the chain tension, motor power drive factors, calculation based on the smallest value.

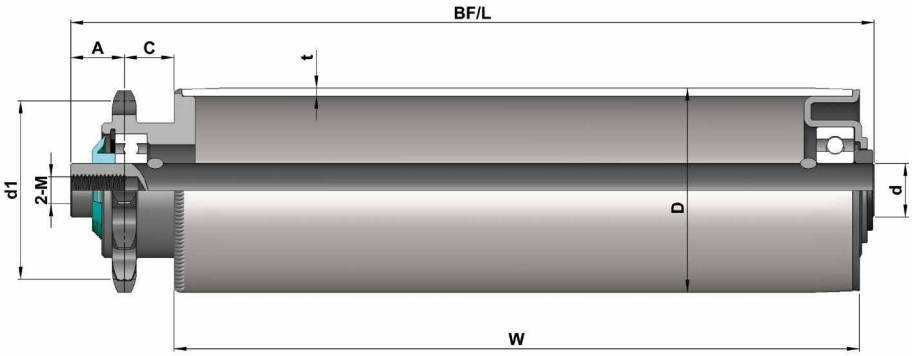

2311 Series Internal Thread

Tube Dia.(D)	Shaft Dia.(d)		Spocket style	A	C	d1
Φ50	Φ12	BF/L=W+40	08B11T	17	18.5	Φ45.08
Φ50	Φ15	BF/L=W+41	08B14T	17	18.5	Φ57.07
Φ60	Φ12/15	BF/L=W+41	08B14T	17	18.5	Φ57.07
Φ76	Φ15	BF/L=W+41	08B14T	17	18.5	Φ57.07
Φ76	Φ20	BF/L=W+44	10A13T	20	18.5	Φ66.33
Φ80	Φ20	BF/L=W+44	10B15T	20	18.5	Φ76.35
Φ89	Φ20	BF/L=W+44	10B15T	20	18.5	Φ76.35

Tube	D*T	Shaft Dia.(d)		
		Φ12 (M8x15)	Φ15 (M10x20)	Φ20 (M12x25)
Steel, zinc plated	Φ50x1.5	2.311.SHC.ACC	2.311.SHC.ADC	
	Φ50x2.0	2.311.SWC.ACC	2.311.SWC.ADC	
	Φ60x2.0	2.311.SOC.ACC	2.311.SOC.ADC	
	Φ60x3.0		2.311.JLA.ADC	
	Φ76x3.0		2.311.JSA.ADC	2.311.JSA.AEC
	Φ76x4.0			2.311.JRB.AEC
	Φ80x3.0			2.311.J6A.AEC
	Φ89x3.0			2.311.JYA.AEC
	Φ89x4.0			2.311.JUB.AEC
Steel, zinc plated with steel flange	Φ60x3.0		2.311.JLG.ADC	
	Φ76x3.0			2.311.JSG.AEC
	Φ76x4.0			2.311.JRG.AEC
	Φ80x3.0			2.311.J6G.AEC
	Φ89x3.0			2.311.JYG.AEC
	Φ89x4.0			2.311.JUG.AEC
Stainless steel (304)	Φ50x1.5	2.311.NHC.BCC	2.311.NHC.BDC	
	Φ60x2.0	2.311.NOC.BCC	2.311.NOC.BDC	
	Φ76x3.0		2.311.NSC.BDC	2.311.NSC.BEC
Stainless steel, with stainless steel flange(304)	Φ60x2.0	2.311.NOG.BCC	2.311.NOG.BDC	
	Φ76x3.0		2.311.NSG.BDC	2.311.NSG.BEC

Φ50、60mm rollers can be fitted with PVC sleeve (2mm).
If steel pallets are transported, the risk of wear on roller surface is higher, please contact us in advance.

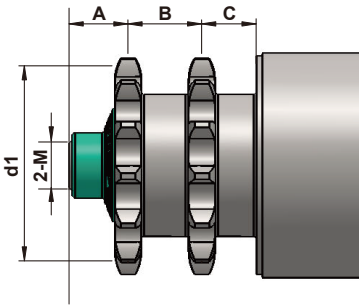

High-strength steel roller

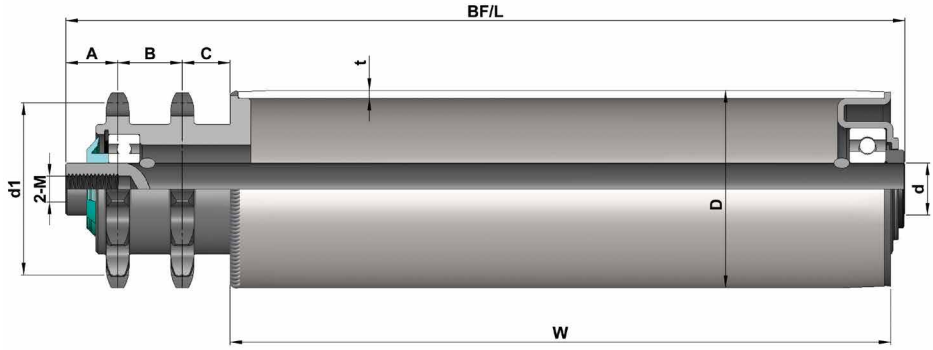

2321 Series Internal Thread

Tube Dia.(D)	Shaft Dia.(d)		Spocket style	A	B	C	d1
Φ50	Φ12	BF/L=W+62	08B11T	17	22	18.5	Φ45.08
Φ50	Φ15	BF/L=W+63	08B14T	17	22	18.5	Φ57.07
Φ60	Φ12/15	BF/L=W+63	08B14T	17	22	18.5	Φ57.07
Φ76	Φ15	BF/L=W+63	08B14T	17	22	18.5	Φ57.07
Φ76	Φ17/20	BF/L=W+69	10A13T	20	25	18.5	Φ66.33
Φ80	Φ20	BF/L=W+69	10B15T	20	25	18.5	Φ76.35
Φ89	Φ20	BF/L=W+69	10B15T	20	25	18.5	Φ76.35

Tube	D*T	Shaft Dia.(d)			
		Φ12 (M8x15)	Φ15 (M10x20)	Φ17 (M12x25)	Φ20 (M12x25)
Steel, zinc plated	Φ50x1.5	2.321.SHC.ACC	2.321.SHC.ADC		
	Φ50x2.0	2.321.SWC.ACC	2.321.SWC.ADC		
	Φ60x2.0	2.321.SOC.ACC	2.321.SOC.ADC		
	Φ60x3.0		2.321.JLA.ADC		
	Φ76x3.0		2.321.JSA.ADC		2.321.JSA.AEC
	Φ76x4.0				2.321.JRB.AEC
	Φ80x3.0				2.321.J6A.AEC
	Φ89x3.0				2.321.JYA.AEC
	Φ89x4.0				2.321.JUB.AEC
Steel, zinc plated with steel flange	Φ60x3.0		2.321.JLG.ADC		
	Φ76x3.0				2.321.JSG.AEC
	Φ76x4.0				2.321.JRG.AEC
	Φ80x3.0				2.321.J6G.AEC
	Φ89x3.0				2.321.JYG.AEC
	Φ89x4.0				2.321.JUG.AEC
High-strength steel，Zinc-plated	Φ76x2.0			2.321.GXA.APC	
High-strength steel，Zinc-platedwith Steel Flange	Φ76x2.0			2.321.GXG.APC	
Stainless steel (304)	Φ50x1.5	2.321.NHC.BCC	2.321.NHC.BDC		
	Φ60x2.0	2.321.NOC.BCC	2.321.NOC.BDC		
	Φ76x3.0		2.321.NSC.BDC		2.321.NSC.BEC
Stainless steel, with stainless steel flange(304)	Φ60x2.0	2.321.NOG.BCC	2.321.NOG.BDC		
	Φ76x3.0		2.321.NSG.BDC		2.321.NSG.BDC

Φ50、60mm rollers can be fitted with PVC sleeve (2mm).
If steel pallets are transported, the risk of wear on roller surface is higher, please contact us in advance.

Steel Flange

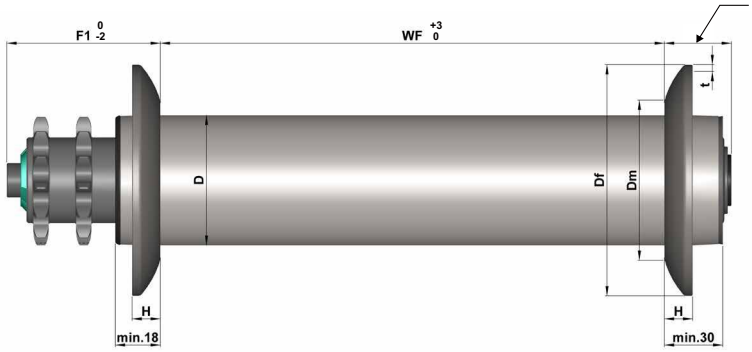

F2 subject to the cumulative error of F1 and WF

Unit：mm

D	Df	Dm	H	t
Φ60	Φ120	Φ80	12	3
Φ76	Φ135	Φ88.5	16.5	4
Φ80	Φ150	Φ110	18	4
Φ89	Φ150	Φ110	18	4

1.Steel flange and tube are welded together making it strong and durable.

2.Steel tube only.

Stainless steel Flange(304)

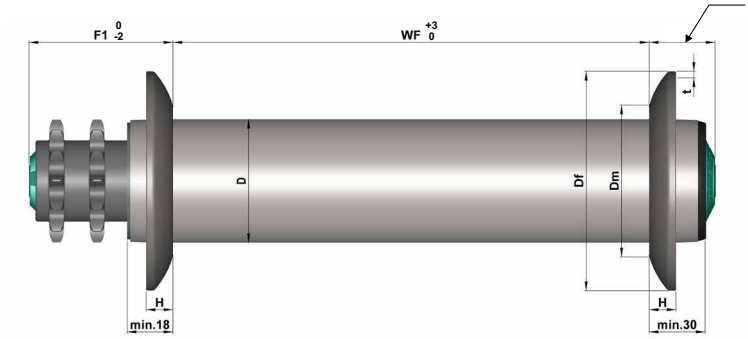

F2 subject to the cumulative error of F1 and WF

Unit：mm

D	Df	Dm	H	t
Φ60	Φ120	Φ80	12	3
Φ76	Φ135	Φ88.5	16.5	3

1.Stainless Steel flange and tube are welded together making it strong and durable.

2.Stainless Steel tube only.